Project 4

Pneumatic Gripper Assembly

In this project, you will create components for a Pneumatic gripper assembly and then assemble them. You need to create all the components as separate part files. The views and dimensions of the components are shown in Figures P4-3 through P4-10.

You can also download the model files for your reference fromwww.cadcim.com. To download the files, use the following path: *Textbooks > CAD/CAM >SOLIDWORKS > SOLIDWORKS 2025 for Designers >Projects for Free Download > Project 4*

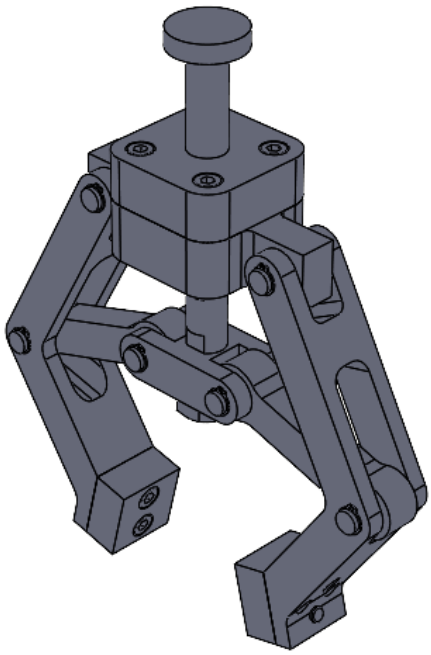

Figure P4-1

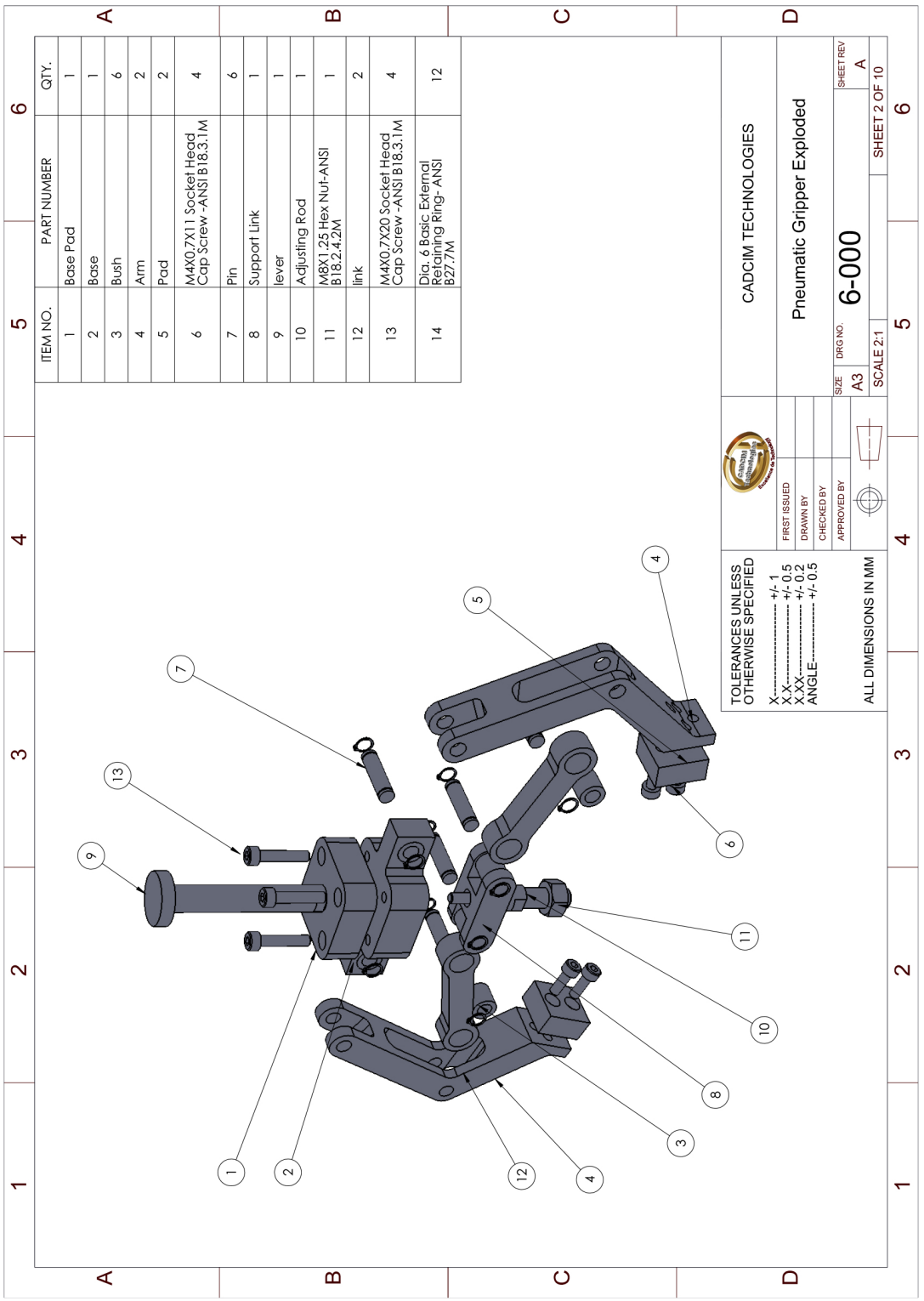
ITEM NO. | PART NUMBER | QTY.
1 | Base Pad | 1
2 | Base | 1
3 | Bush | 6
4 | Arm | 2
5 | Pad | 2
6 | M4X0.7X11 Socket Head Cap Screw -ANSI B18.3.1M | 4
7 | Pin | 6
8 | Support Link | 1
9 | lever | 1
10 | Adjusting Rod | 1
11 | M8X1.25 Hex Nut-ANSI B18.2.4.2M | 1
12 | link | 2
13 | M4X0.7X20 Socket Head Cap Screw -ANSI B18.3.1M | 4
14 | Dia. 6 Basic External Retaining Ring- ANSI B27.7M | 12
TOLERANCES UNLESS OTHERWISE SPECIFIED
X----------- +/- 1
X.X---------- +/- 0.5
X.XX--------- +/- 0.2
ANGLE------- +/- 0.5
ALL DIMENSIONS IN MM
FIRST ISSUED
DRAWN BY
CHECKED BY
APPROVED BY
CADCIM TECHNOLOGIES
Pneumatic Gripper Exploded
SIZE A3
DRG NO. 6-000
SHEET REV A
SCALE 2:1
SHEET 2 OF 10

Figure P4-2

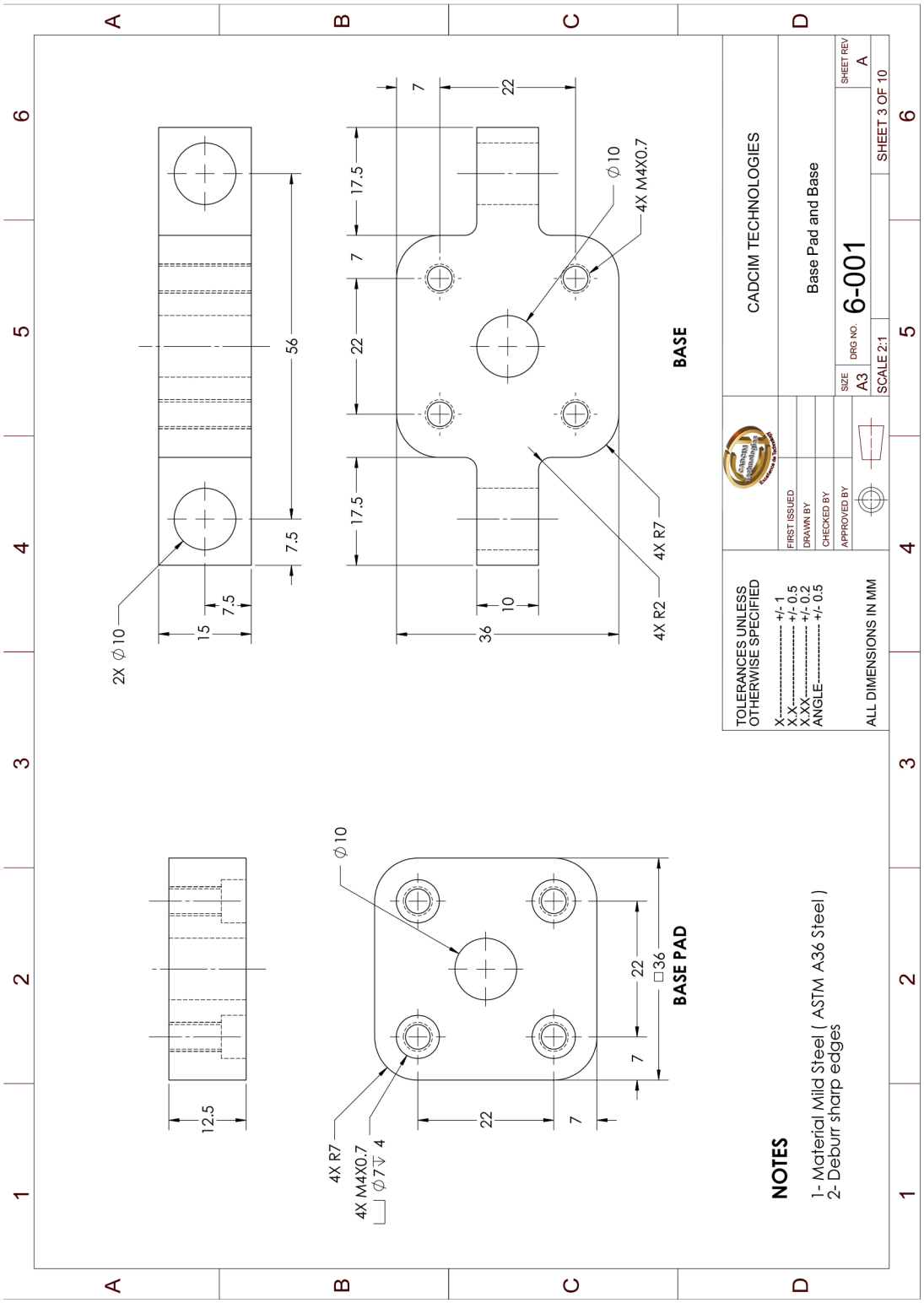
CADCIM TECHNOLOGIES
Base Pad and Base
SIZE A3
DRG NO. 6-001
SHEET REV A
SCALE 2:1
SHEET 3 OF 10
FIRST ISSUED
DRAWN BY
CHECKED BY
APPROVED BY
TOLERANCES UNLESS OTHERWISE SPECIFIED
X---------- +/- 1
X.X---------- +/- 0.5
X.XX---------- +/- 0.2
ANGLE---------- +/- 0.5
ALL DIMENSIONS IN MM
BASE
BASE PAD
2X ⌀10
4X M4X0.7
4X R7
4X R2
⌀10
□36
4X M4X0.7
⌀7 ↧ 4
NOTES
1- Material Mild Steel (ASTM A36 Steel)
2- Deburr sharp edges

Figure P4-3

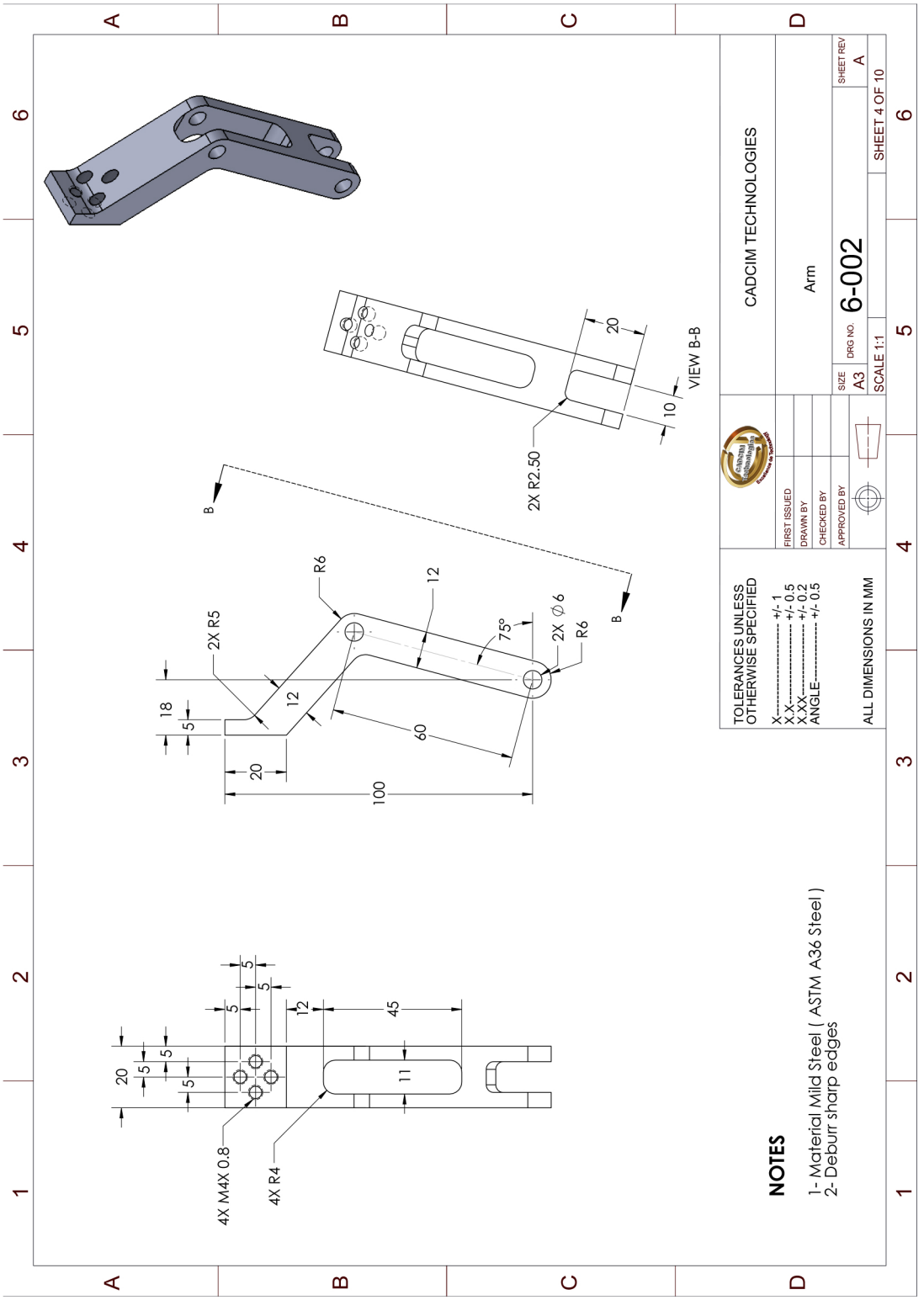
A
B
C
D
1
2
3
4
5
6
NOTES
1- Material Mild Steel (ASTM A36 Steel)
2- Deburr sharp edges
TOLERANCES UNLESS OTHERWISE SPECIFIED
X ---------- +/- 1
X.X ---------- +/- 0.5
X.XX ---------- +/- 0.2
ANGLE ---------- +/- 0.5
ALL DIMENSIONS IN MM
FIRST ISSUED
DRAWN BY
CHECKED BY
APPROVED BY
CADCIM TECHNOLOGIES
Arm
SIZE A3
DRG NO. 6-002
SCALE 1:1
SHEET REV A
SHEET 4 OF 10
4X M4X 0.8
4X R4
2X R5
2X R2.50
2X ⌀6
R6
VIEW B-B

Figure P4-4

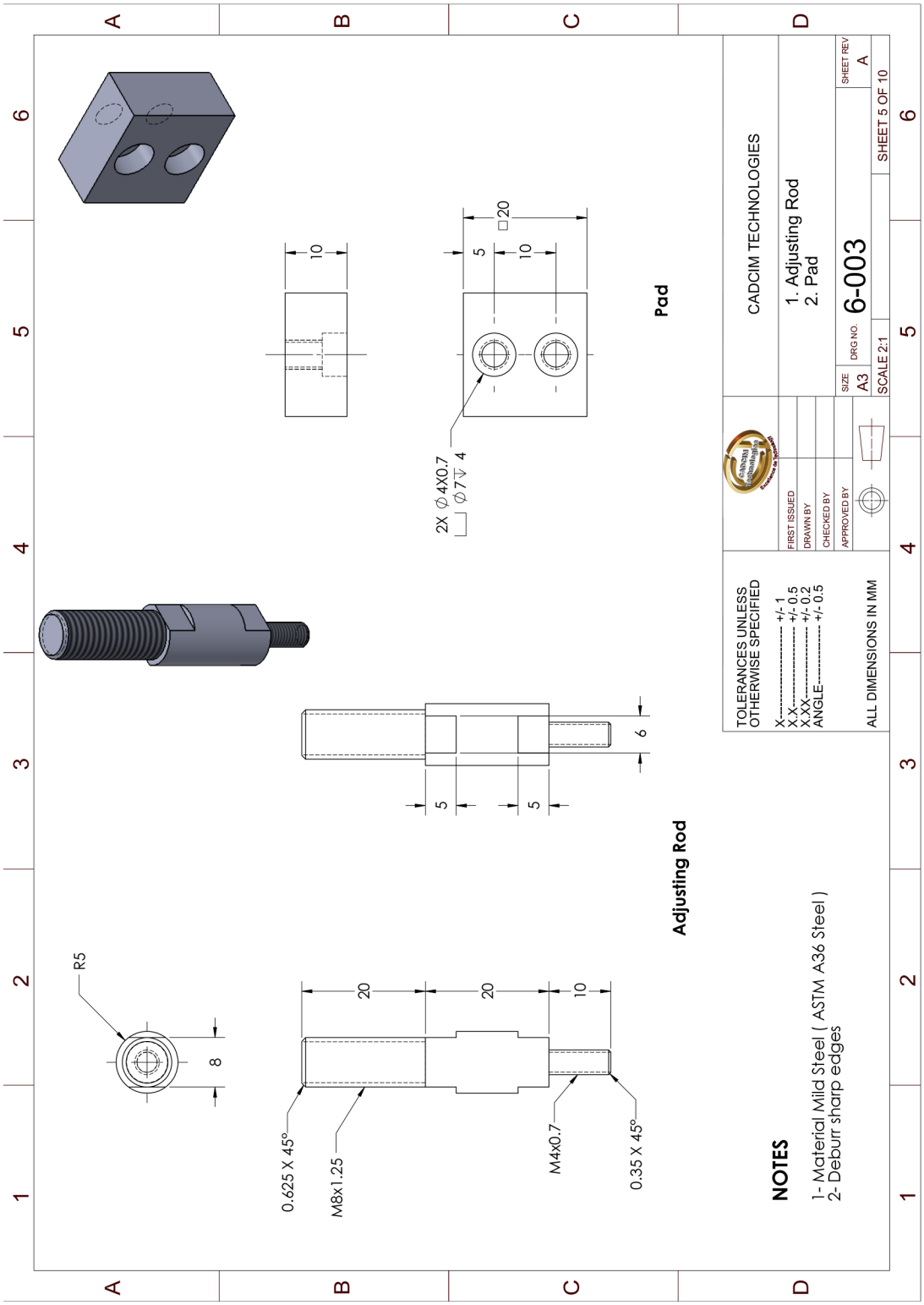
Pad
Adjusting Rod
R5
8
20
20
10
0.625 X 45°
M8x1.25
M4x0.7
0.35 X 45°
5
5
6
10
5
10
□20
2X ⌀4X0.7
⌴ ⌀7 ↧ 4
NOTES
1- Material Mild Steel (ASTM A36 Steel)
2- Deburr sharp edges
TOLERANCES UNLESS OTHERWISE SPECIFIED
X---------- +/- 1
X.X---------- +/- 0.5
X.XX---------- +/- 0.2
ANGLE---------- +/- 0.5
ALL DIMENSIONS IN MM
FIRST ISSUED
DRAWN BY
CHECKED BY
APPROVED BY
CADCIM TECHNOLOGIES
1. Adjusting Rod
2. Pad
SIZE
A3
DRG NO.
6-003
SHEET REV
A
SCALE 2:1
SHEET 5 OF 10

Figure P4-5

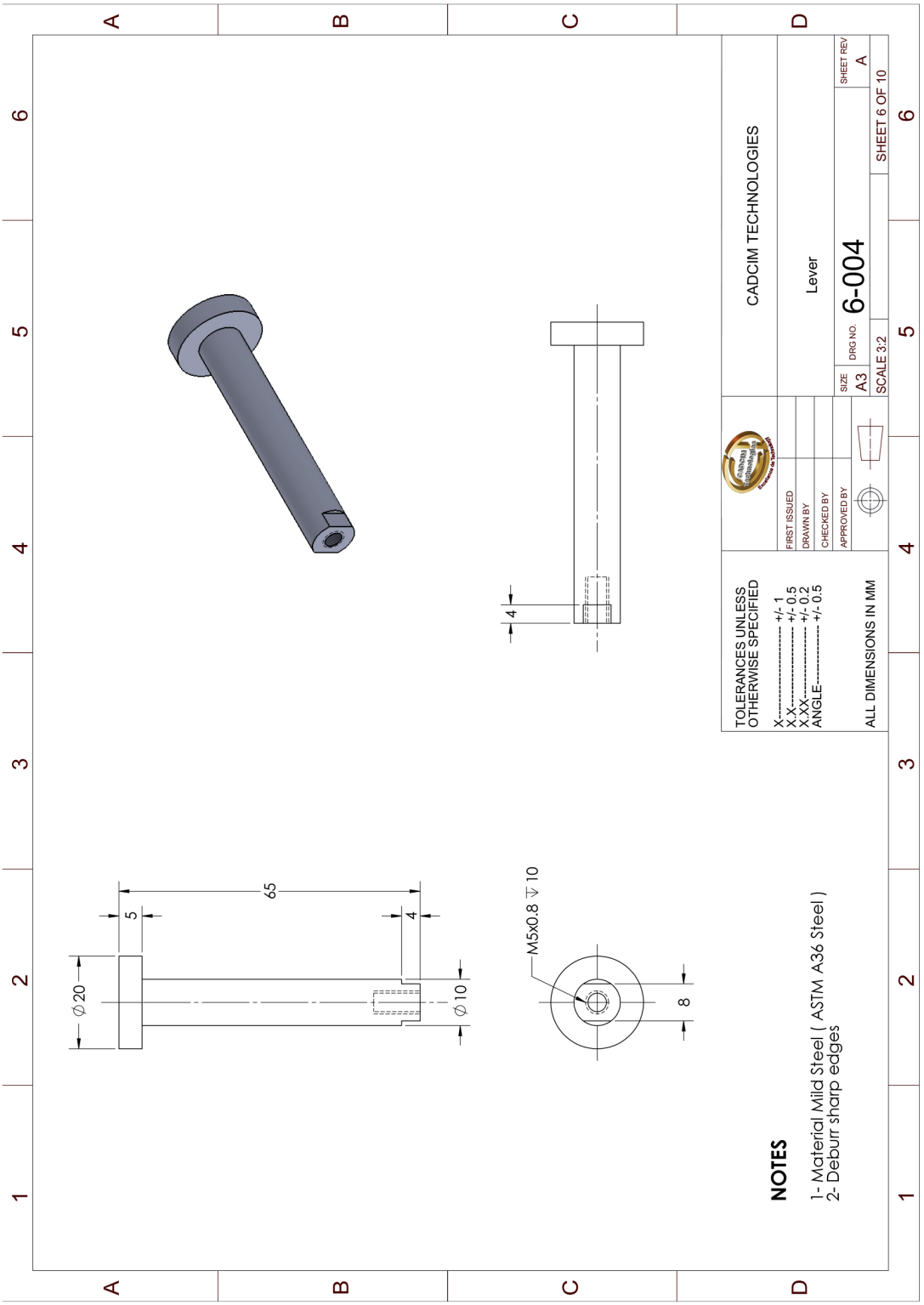
A
B
C
D
1
2
3
4
5
6
CADCIM TECHNOLOGIES
Lever
DRG NO. 6-004
SIZE A3
SCALE 3:2
SHEET 6 OF 10
SHEET REV A
FIRST ISSUED
DRAWN BY
CHECKED BY
APPROVED BY
TOLERANCES UNLESS OTHERWISE SPECIFIED
X ---------- +/- 1
X.X ---------- +/- 0.5
X.XX ---------- +/- 0.2
ANGLE ---------- +/- 0.5
ALL DIMENSIONS IN MM
NOTES
1- Material Mild Steel (ASTM A36 Steel)
2- Deburr sharp edges
65
5
4
Φ20
Φ10
M5x0.8 ↧ 10
8
4

Figure P4-6

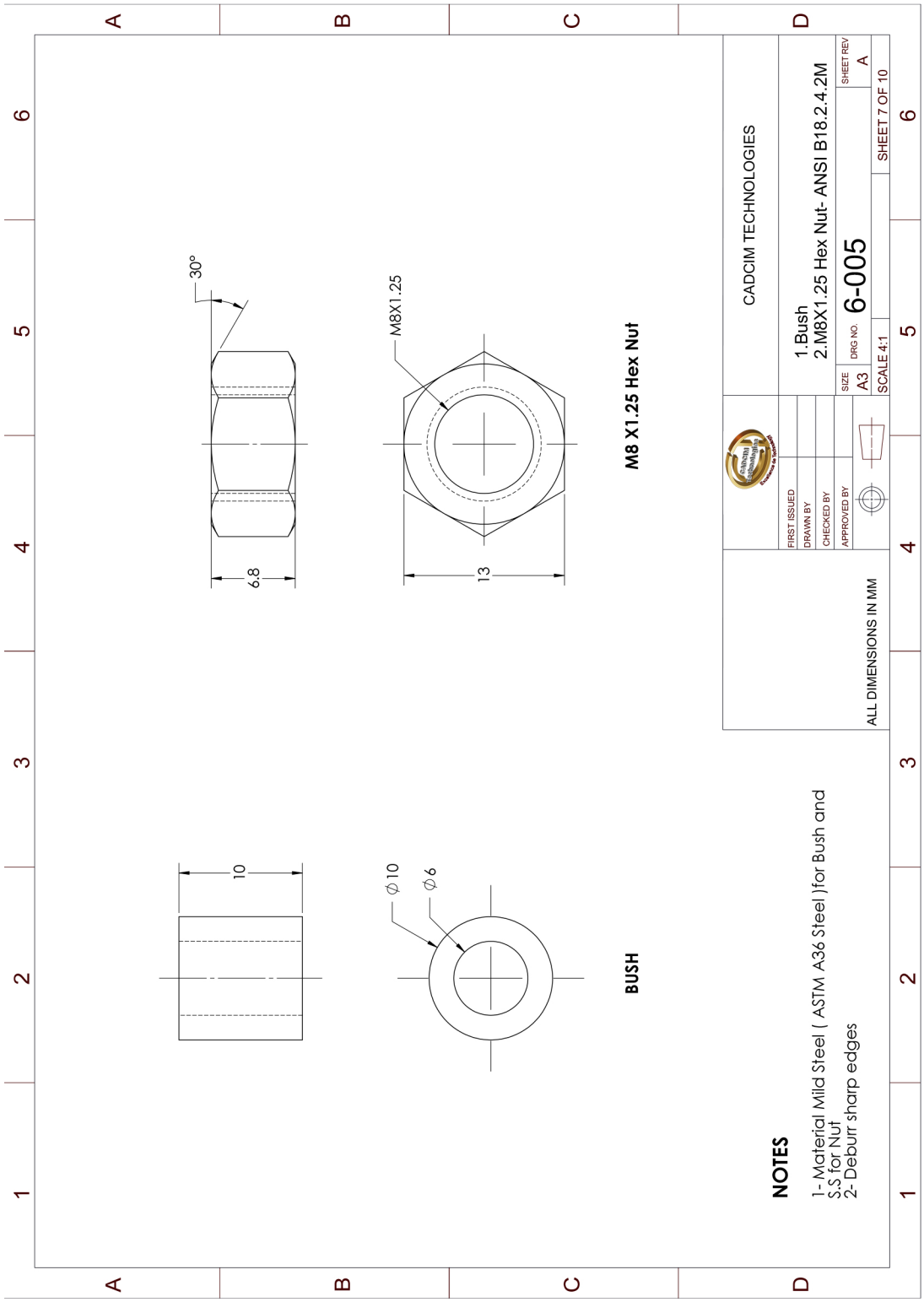
30°
6.8
M8X1.25
13
M8 X1.25 Hex Nut
10
ϕ10
ϕ6
BUSH
NOTES
1- Material Mild Steel (ASTM A36 Steel)for Bush and S.S for Nut
2- Deburr sharp edges
CADCIM TECHNOLOGIES
1.Bush
2.M8X1.25 Hex Nut- ANSI B18.2.4.2M
FIRST ISSUED
DRAWN BY
CHECKED BY
APPROVED BY
SIZE A3
DRG NO. 6-005
SCALE 4:1
SHEET REV A
SHEET 7 OF 10
ALL DIMENSIONS IN MM

Figure P4-7

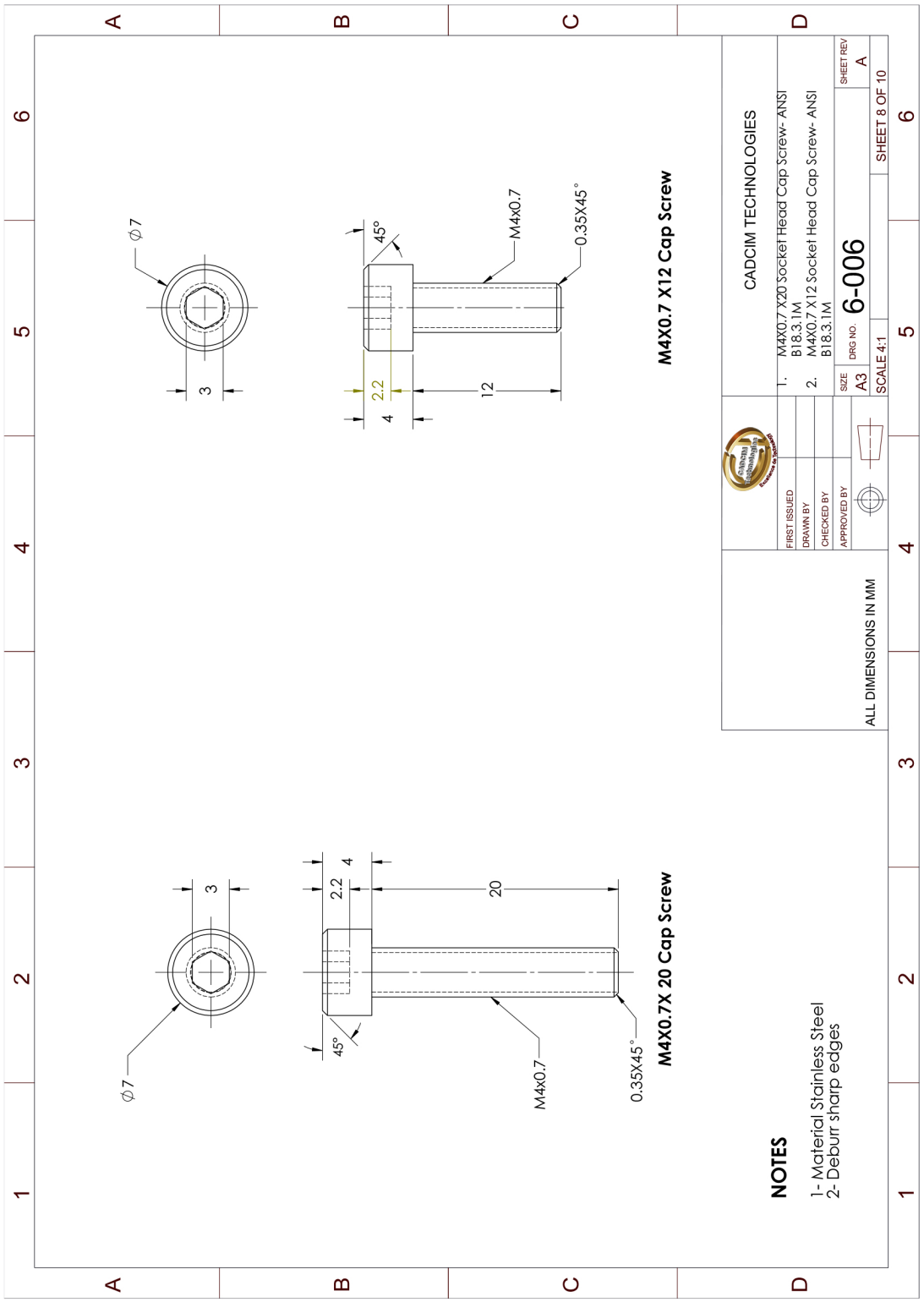
M4X0.7 X12 Cap Screw
M4X0.7X 20 Cap Screw
NOTES
1- Material Stainless Steel
2- Deburr sharp edges
CADCIM TECHNOLOGIES
1. M4X0.7 X20 Socket Head Cap Screw- ANSI B18.3.1M
2. M4X0.7 X12 Socket Head Cap Screw- ANSI B18.3.1M
FIRST ISSUED
DRAWN BY
CHECKED BY
APPROVED BY
SIZE A3
DRG NO. 6-006
SHEET REV A
SCALE 4:1
SHEET 8 OF 10
ALL DIMENSIONS IN MM
M4X0.7
0.35X45°
45°
20
12
2.2
4
3
ϕ7

Figure P4-8

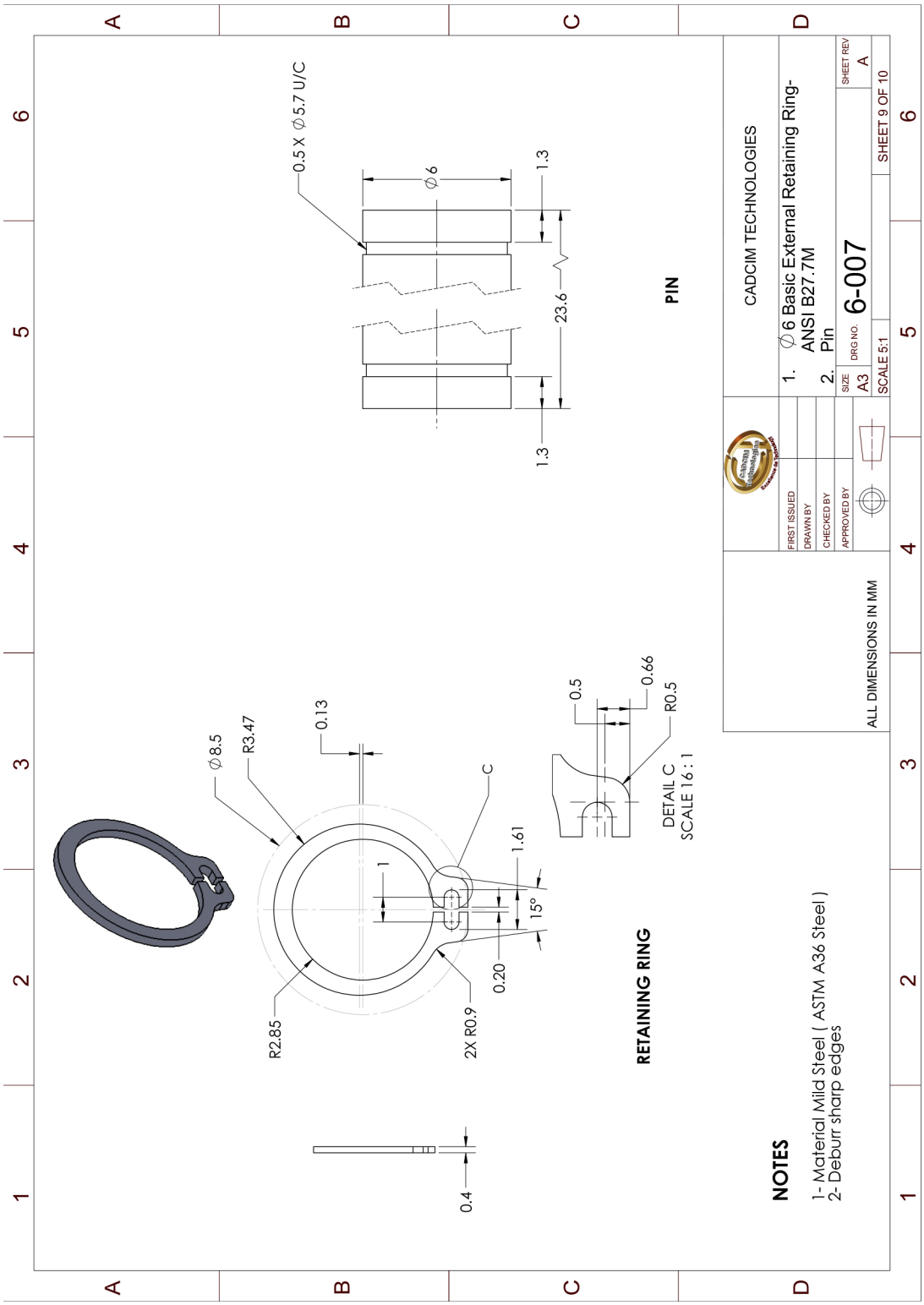
PIN
0.5 X ⌀5.7 U/C
⌀6
1.3
23.6
1.3
RETAINING RING
⌀8.5
R3.47
0.13
C
1
1.61
15°
0.20
2X R0.9
R2.85
0.4
DETAIL C
SCALE 16 : 1
0.5
0.66
R0.5
NOTES
1- Material Mild Steel (ASTM A36 Steel)
2- Deburr sharp edges
ALL DIMENSIONS IN MM
CADCIM TECHNOLOGIES
1. ⌀6 Basic External Retaining Ring-ANSI B27.7M
2. Pin
FIRST ISSUED
DRAWN BY
CHECKED BY
APPROVED BY
SIZE A3
DRG NO. 6-007
SCALE 5:1
SHEET 9 OF 10
SHEET REV A

Figure P4-9

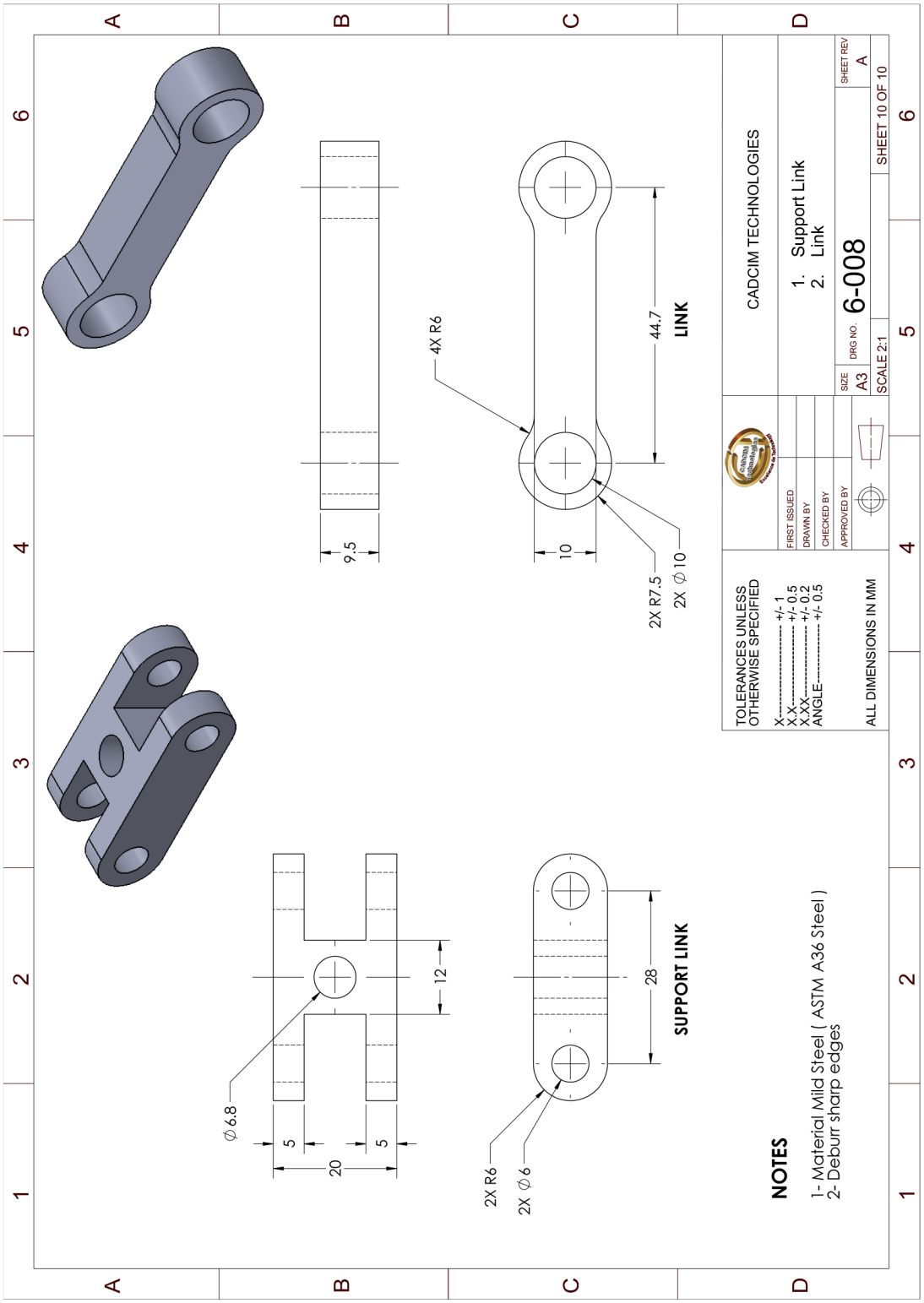
CADCIM TECHNOLOGIES
1. Support Link
2. Link
SIZE A3
DRG NO. 6-008
SHEET REV A
SCALE 2:1
SHEET 10 OF 10
FIRST ISSUED
DRAWN BY
CHECKED BY
APPROVED BY
TOLERANCES UNLESS OTHERWISE SPECIFIED
X ---------- +/- 1
X.X ---------- +/- 0.5
X.XX ---------- +/- 0.2
ANGLE ---------- +/- 0.5
ALL DIMENSIONS IN MM
NOTES
1- Material Mild Steel (ASTM A36 Steel)
2- Deburr sharp edges
LINK
4X R6
44.7
9.5
10
2X R7.5
2X ⌀10
SUPPORT LINK
⌀6.8
5
5
20
12
28
2X R6
2X ⌀6

Figure P4-10